1

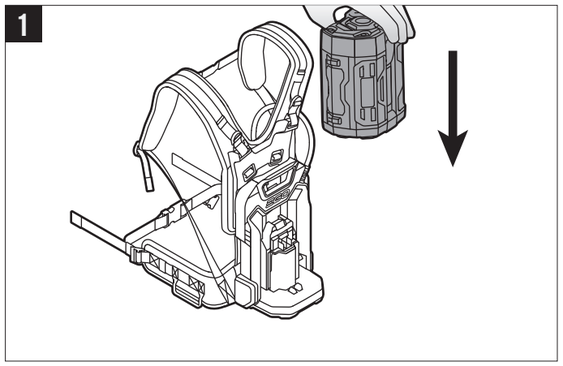

2

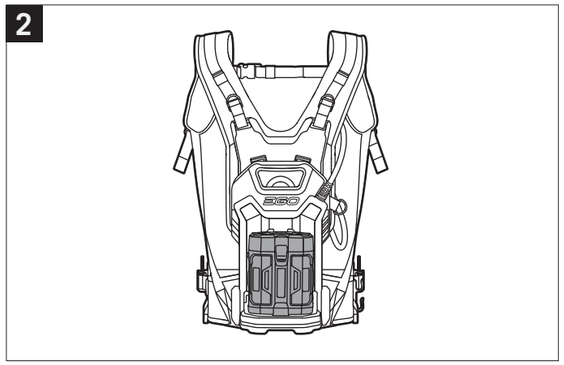

7-A

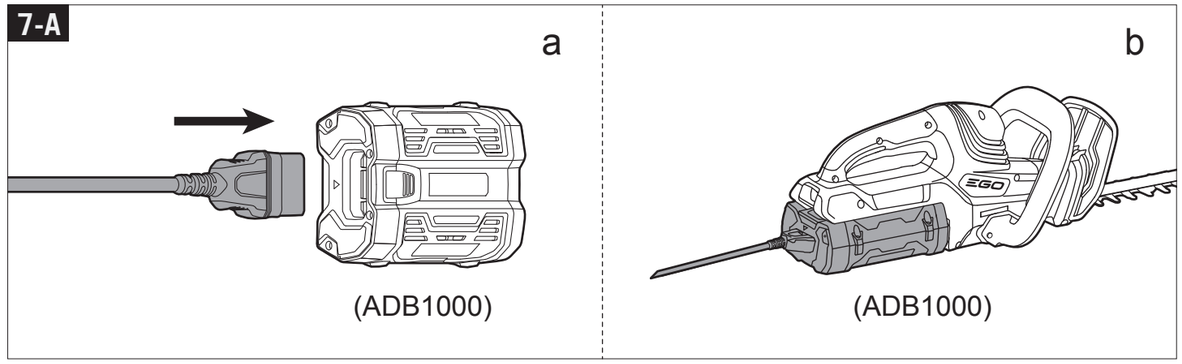

3

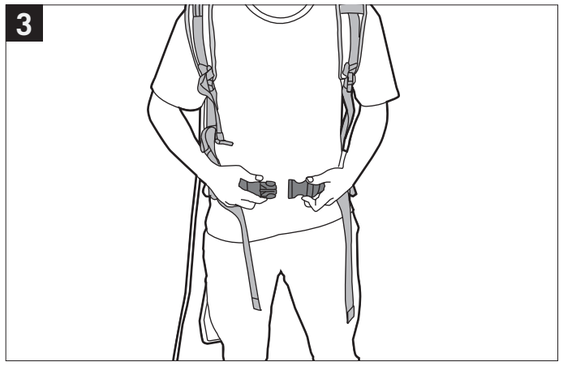

4

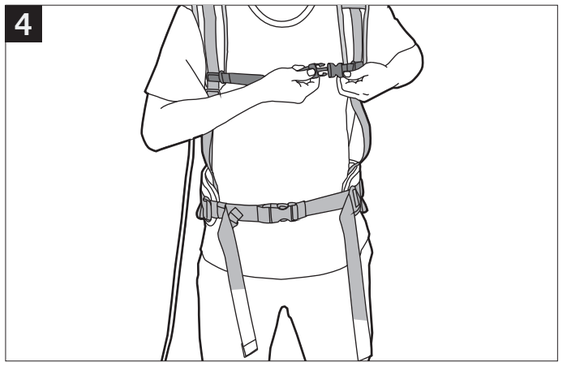

7-B

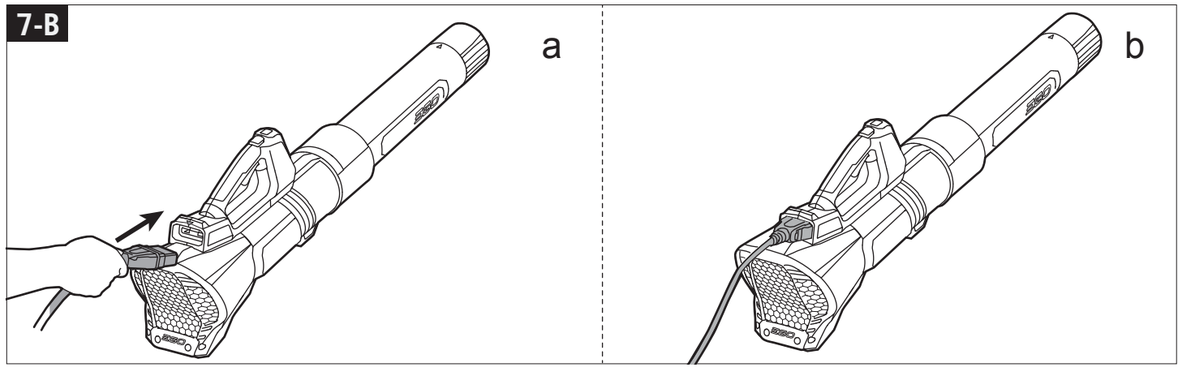

5

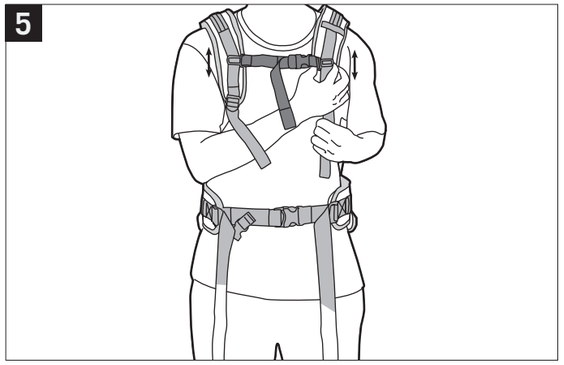

6

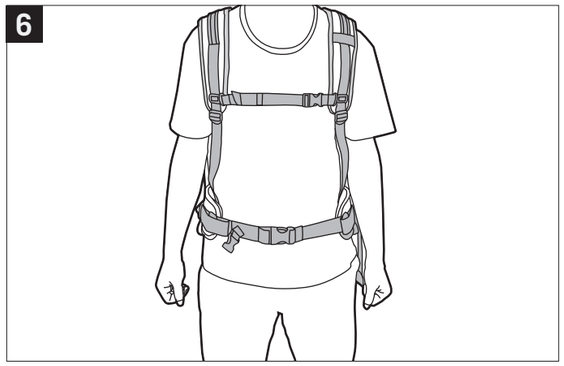

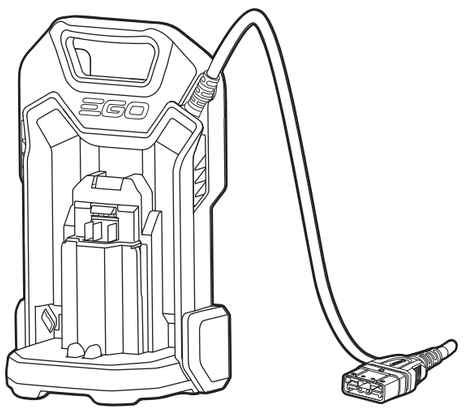

(BHX1000)

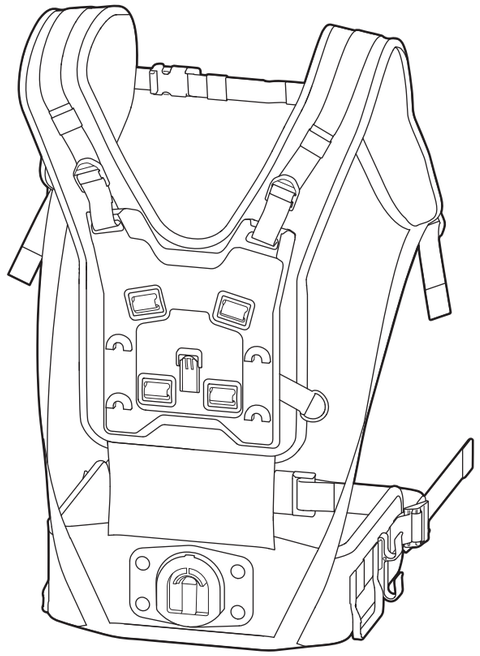

(AFH1500)

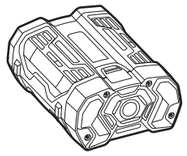

BA1120E, BA1400, BA1400T
BA2240E, BA2800, BA2800T
BA3360, BA4200, BA4200T,
BA5600T,BA2240T

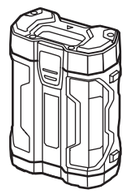

(ADB1000)

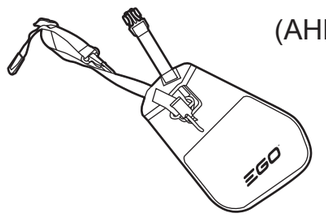

(AHP1500)

1

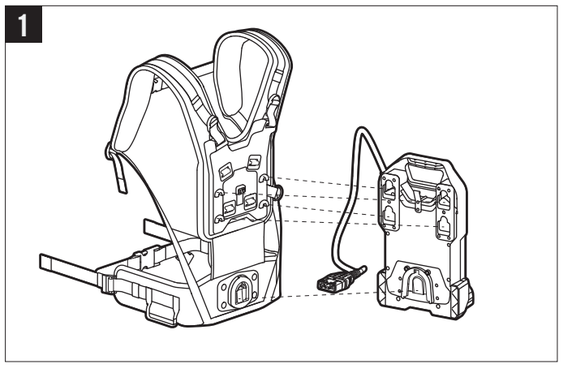

2

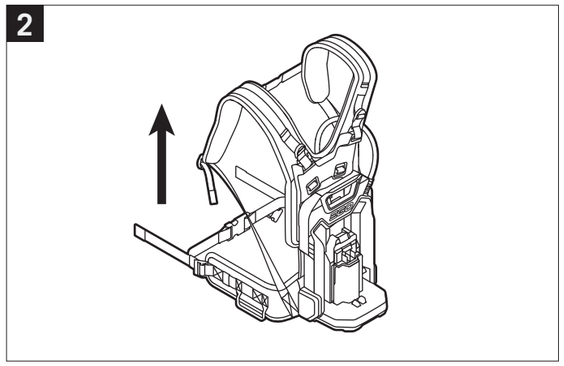

3

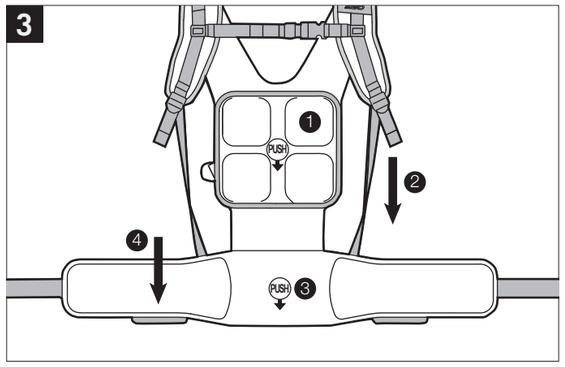
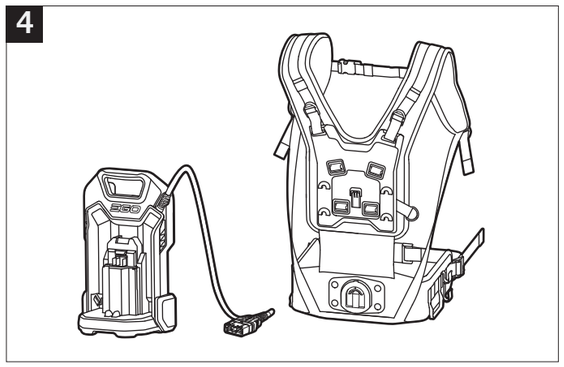
4